TTV LUGGED VALVE

50L3040V0

Lugged Butterfly Valve · DN32-200

Ref. L3220050304OV0

Carbon Steel ASTM body, Stainless Steel disc and FKM VITON seat. Supplied with a bare shaft and top flange for a gearbox or actuator.

- Face to face EN 558 Series 20
- Pressure tested to EN 12266-1, ISO 5208
- Tightness ISO 5208, zero leakage API 598
- ISO 5752 Connection F5/F7 / F7
- Mounts between PN10/16 flanges

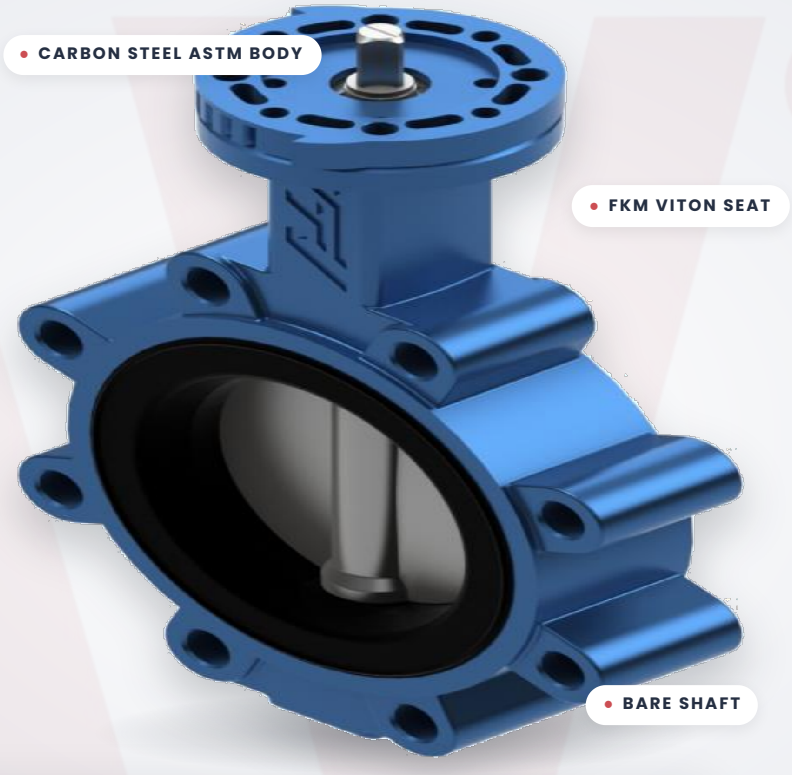

32-200 mm	PN10-16 · ANSI 150	-5...+180 °C	FKM VITON
NOMINAL SIZE (DN)	PRESSURE RATING	TEMPERATURE RANGE	SEAT MATERIAL

Construction.

MATERIALS OF CONSTRUCTION

BODY	SHAFT	DISC	SEAT
Carbon Steel ASTM	**Stainless Steel**	**Stainless Steel**	**FKM VITON**
A216 Grade WCB	ASTM A182 F304	ASTM A351 CF 8M	

MOUNTING BETWEEN FLANGES
PN10/16 · ISO 7005, DIN 2501, EN 1092-1 · ANSI class 150: ANSI B16.5

FACE TO FACE
EN 558 Series 20 · ISO 5752 Series 20 · API 609 Table 1 · BS 5155 Series 4

PRESSURE TEST
EN 12266-1, ISO 5208: Body: 1.5×PN · Seat: 1.1×PN

TIGHTNESS TEST
ISO 5208, zero leakage API 598

TEMPERATURE
-5°C up to +180°C

TECHNICAL DATA

Dimensions & standards.

Lug DN32-200 | PN10-16 & ANSI 150
Valve with bare shaft
Model shown on source sheet: 50L3040 FKM VITON. Source: TTV datasheet ref. L32200503040V0, revision 0 (26-9-2019).

DIMENSIONAL DRAWING

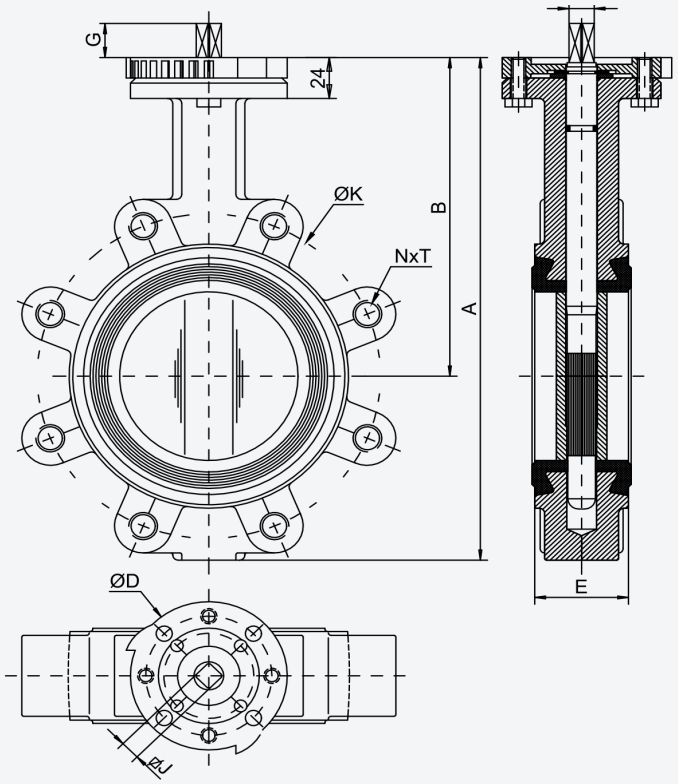

STANDARDS & RATINGS

Temperature
-5°C up to +180°C

Tolerances
ISO 2768-M

Face to Face
EN 558 Series 20
ISO 5752 Series 20
API 609 Table 1
BS 5155 Series 4

Pressure test according to
EN 12266-1, ISO 5208:
Body: 1.5×PN
Seat: 1.1×PN

Mounting between flanges
PN10/16
ISO 7005, DIN 2501, EN 1092-1
ANSI class 150: ANSI B16.5

Tightness test
ISO 5208, zero leakage API 598

Dimensions.

50L3040V0 · DN32-200

DN		A	B	D	E	F	G	J	PN10		PN16		ANSI150		ISO 5752 Connection	Weight Kg
mm	inch								K	N°×T1	K	N°×T1	K	N°×T1		
32	1¼"	205	140	88	33	9.5	14	8	100	4×M16	100	4×M16	88.9	4×1/2"	F5/F7	3
40	1½"	205	140	88	33	9.5	14	8	110	4×M16	110	4×M16	98.5	4×1/2"	F5/F7	3
50	2"	228	156	88	43	9.5	14	8	125	4×M16	125	4×M16	120.6	4×5/8"	F5/F7	3.5
65	2½"	248	161	88	46	12	16	9	145	4×M16	145	4×M16	139.7	4×5/8"	F5/F7	4.5
80	3"	265	169	88	46	14	16	11	160	8×M16	160	8×M16	152.4	4×5/8"	F5/F7	6.5
100	4"	298	187	88	52	14	20	11	180	8×M16	180	8×M16	190.5	8×5/8"	F5/F7	8
125	5"	331	206	105	56	17	20	14	210	8×M16	210	8×M16	215.9	8×3/4"	F7	11
150	6"	349	215	105	56	17	20	14	240	8×M20	240	8×M20	241.3	8×3/4"	F7	12
200	8"	430	255	105	60	21	24	17	295	8×M20	295	12×M20	298.5	8×3/4"	F7	18.5

(Note) dimensions and standards may vary without announcement. Colours are orientative.

Data supplied by TTV and provided for reference only. Specifications may change without notice – please confirm details with Actuation Valve & Control before ordering.

Need this valve automated?
Talk to our UK team about gearboxes, actuators and complete actuated valve packages.
actuation.co.uk